Wall Length
(1805.7x2)x π*14/10 + 120*4
= 15883.80 + 480
= 16363.80 mm
約 16364 mm

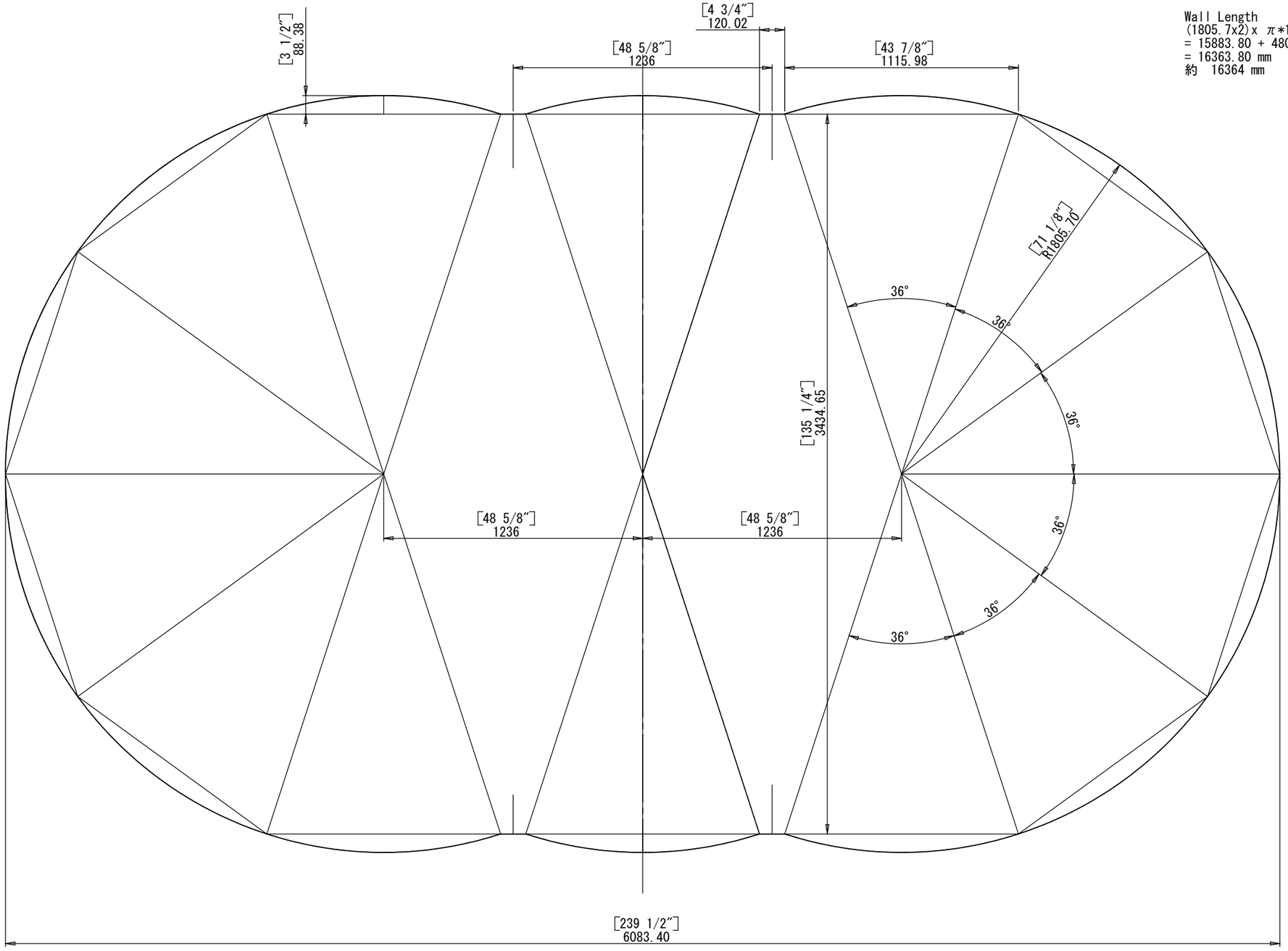

UNLESS OTHERWISE SPECIFIED: DIMENSIONS ARE IN MILLIMETERS SURFACE FINISH: TOLERANCES: LINEAR: ANGULAR:	FINISH:				DEBUR AND BREAK SHARP EDGES	DO NOT SCALE DRAWING / REVISION
	NAME	SIGNATURE	DATE			TITLE:
DRAWN						12Base 20x12x52 Wall Draw
CHK'D						
APPV'D						
MFG						
Q.A				MATERIAL:		DWG NO. A2
				WEIGHT:		SCALE:1:2 / SHEET 1 OF 1